2003

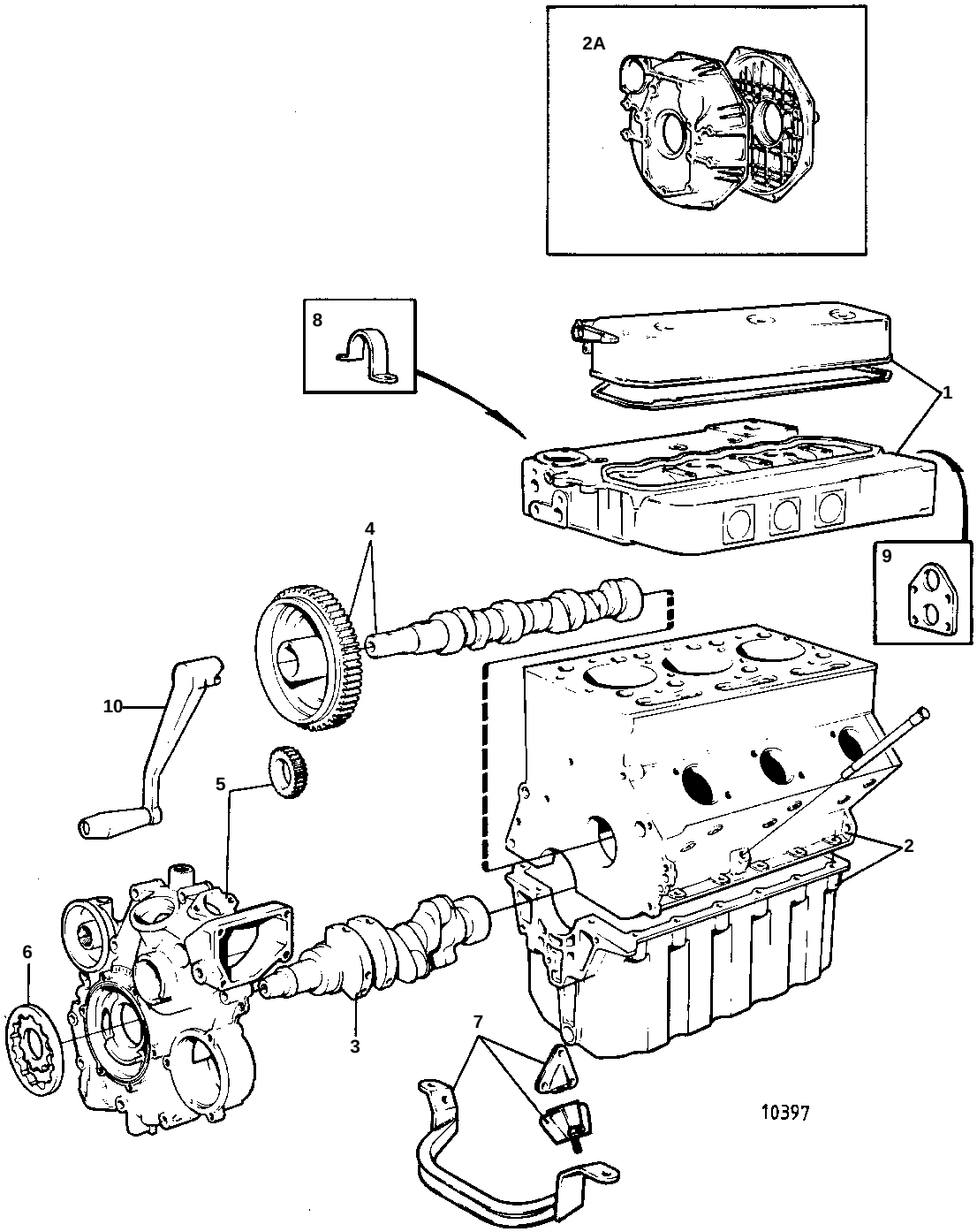

2003

| REF | QTY | DESCRIPTION | | SEE SEC. | NOTES |
|---|---|---|---|---|---|
| 1 | 1 | CYLINDER HEAD | | 02A-4300 | |
| 2 | 1 | CYLINDER BLOCK | | 02A-5300 | |
| | | | | | |
| | | | | | |
| 2A | 1 | FLYWHEEL COVER | | 02A-5800 | |
| 3 | 1 | CRANKSHAFT AND RELATED PARTS | | 02A-6360 | |
| | | | | | |
| | | | | | |
| | | | | | |
| 4 | 1 | CAMSHAFT AND VALVE MECHANISM | | 02A-7200 | |
| | | | | | |
| 5 | 1 | TIMING GEAR COVER AND GEARS | | 02A-8200 | |
| | | | | | |
| 6 | 1 | LUBRICATING SYSTEM | | 02A-8700 | |
| | | | | | |
| 7 | 1 | ENGINE MOUNTS | | 02A-9220 | |
| | | | | | |
| 8 | 1 | LIFT IRON | | | SEE GROUP 2B |
| 9 | 1 | LIFT IRON | | | SEE GROUP 2B |
| 10 | 1 | STARTING CRANK | | | SEE GROUP 9 |
| | | | | | |